weather guard®

...“The Professionals’ Choice”

For Pickups and Flatbed Trucks

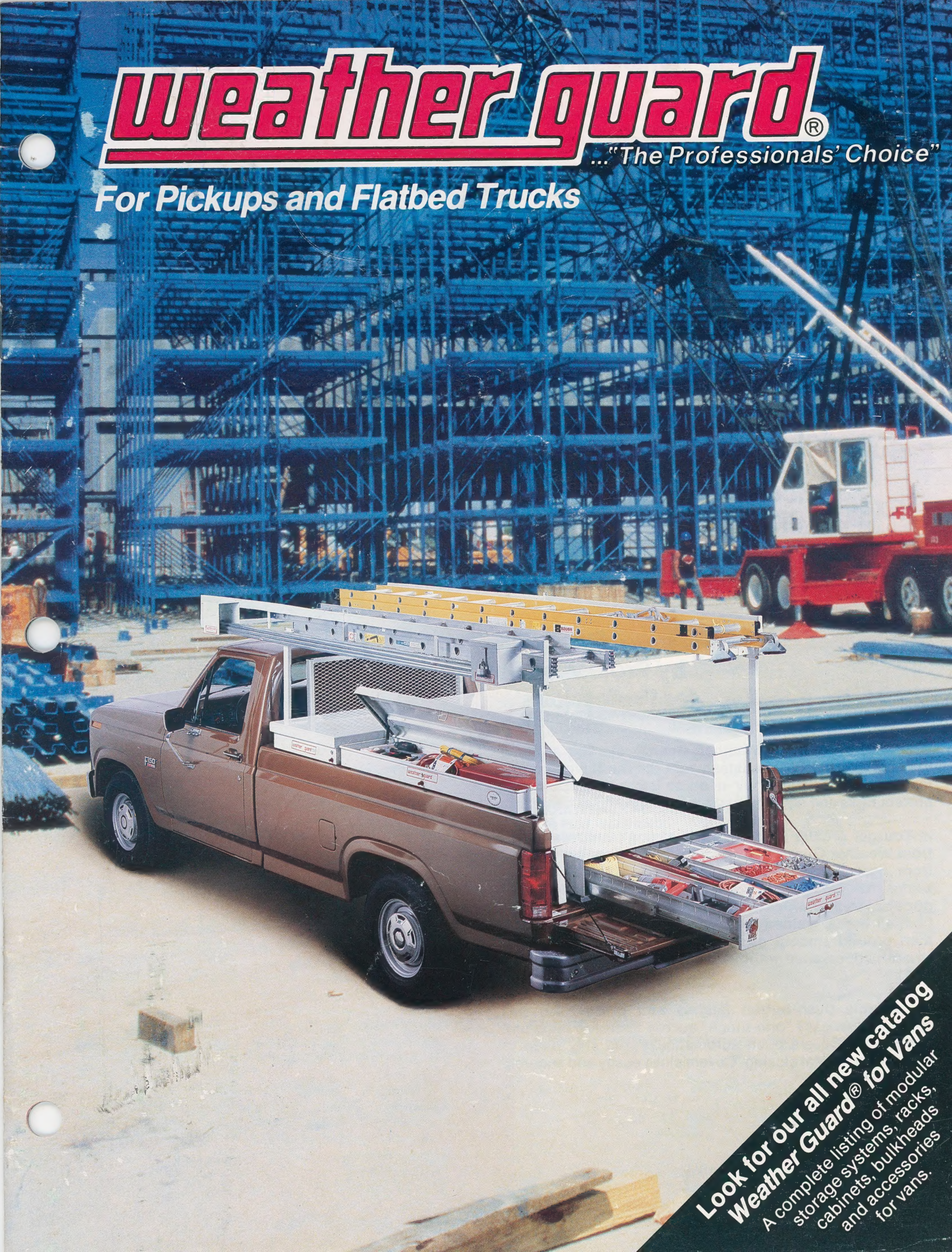

Look for our all new catalog
Weather Guard® for Vans
A complete listing of modular storage systems, racks, cabinets, bulkheads and accessories for vans.

weather guard®

Storage Systems for Trucks . . .

Four reasons why Weather Guard® storage systems out perform the rest.

1. Quality Design and Engineering
2. Superior Materials
3. Excellence in Manufacturing and Quality Control
4. Armor-Tuf™ Bonded Polyester Coating

Designed by Professionals . . . for Professionals.

Specially designed Weather Guard® storage systems provide professional craftsmen with the durability, convenience and security they need to store, transport and protect tools and equipment on the jobsite and at home.

You get greater load capacity, strength and durability from Weather Guard ® products because they are formed from rigid 12, 14 and 16 gauge steel. Fully arc-welded seams, formed ribs and welded channels combine to produce boxes that won't warp, twist, bulge or crush. In addition, all visible welded seams are welded from the inside, then ground smooth on the outside to provide a clean, smooth appearance without sacrificing the integrity of the weld.

Lockable push-button latches and pressurized gas springs allow easy "one-touch" access to stored tools and equipment. Covers open automatically and stay open to prevent accidental closing. Covers close easily and securely with one hand.

...."The Professionals' Choice"

for long-lasting service, dependability and good looks

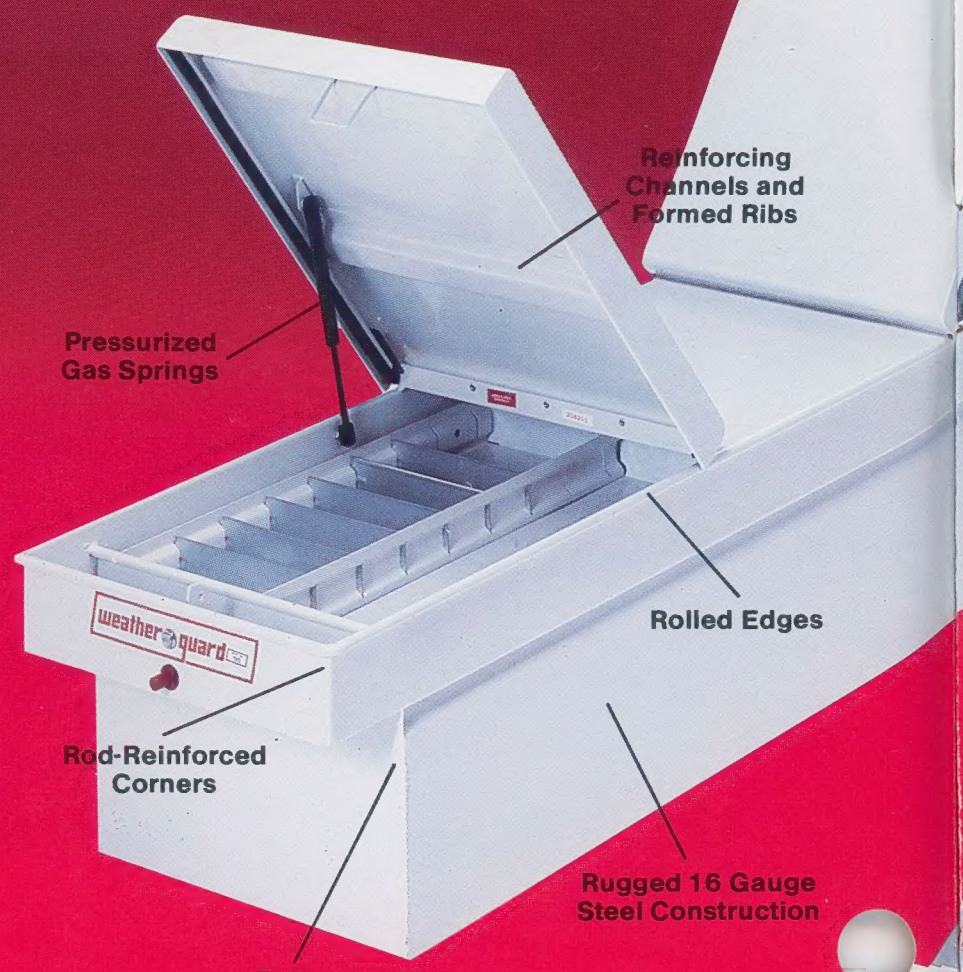

Armor-Tuf™ Polyester Bonded Coating keeps your Weather Guard® equipment looking good even after years of rough service

Armor-Tuf™ coating far exceeds the protective value of ordinary painted finishes by completely coating all metal surfaces with a thick, flexible and protective shield. The baked polyester coating is applied up to 4 mils thick!

Durable Armor - Tuf ™ Polyester Bonded Coating stands up to rough service year after year. Call us for a free test panel!

Protect your valuables from theft and weather

All Weather Guard® storage boxes are completely weatherstripped to keep your tools and supplies clean and dry.

Full-length, concealed piano hinges, heavy-duty steel latch heads and built-in cylinder locks keep thieves out — contents in. The positive locking system resists breakage and forcible entry.

Weather Guard® storage systems have been designed for easy installation. All you need is a set of basic hand tools. Complete step-by-step mounting instructions are provided.

ARMOR-TUF™
BONDED COATING

Index

PRODUCTS	PAGE
CROSS BOXES — Twin-cover storage boxes that fit across the bed behind the cab of your pickup truck.	5
LO-SIDE BOXES — Low-profile boxes with flip-up covers that mount along the side rails of your pickup.	5
PACK RATS — Low-profile drawer units for organizing those "hard-to-find" small parts and tools; three sizes to fit trucks, vans and service bodies.	5
SADDLE BOXES — Similar to Cross Box but with a single, wide-opening cover.	7
SUPER LO-SIDE BOXES — Low-profile, side-rail-mounted storage boxes with greater storage capacity.	7
ALL-PURPOSE TRUCK CHESTS — Utility chests for pickup trucks and El Camino/Ranchero style trucks.	7
ACCESSORIES FOR CROSS BOXES, LO-SIDE BOXES, SADDLE BOXES AND TRUCK CHESTS — Trays, Touch-Up Paint, Lube Compound.	7
HI-SIDE BOXES — Cabinet style boxes with drop-down doors.	8
SUPER-SIDE BOXES — The storage champions — Hi-Side boxes with greater depth and height for expanded storage capacity.	8
ACCESSORIES FOR HI-SIDE AND SUPER-SIDE BOXES — Accessory Trays and Parts Cabinet.	9
LADDER RACKS FOR FULL-SIZE AND MINI-PICKUP TRUCKS — A series of racks for a variety of needs.	10-11
WEEKENDER LADDER RACKS — Light duty, easily removable pickup ladder rack.	11
LADDER RACK ACCESSORIES FOR FULL-SIZE AND MINI-PICKUP TRUCKS — Extra Cross Member, Accessory Roller, Conduit Carrier, Protecta Rail, and Accessory Screen.	12-13
LADDER RACK AND ACCESSORIES FOR SERVICE BODY TRUCKS — Special mounting rack and equipment to make your service truck more functional.	13
UNDERBED BOXES — For underneath flatbeds, trailers, stake bodies, and dump bodies.	14-15
STRONG BOXES — Maximum security boxes for locked storage inside your truck cap.	15

weather guard®

Get maximum visibility and better truck balance even with heavy loads using low-profile storage boxes and Pack Rats.

For full-size and mini-pickups, these space efficient boxes hold heavy loads at the lowest possible center of gravity to improve truck handling, while allowing for the best possible visibility out the back and sides.

Sturdy 16 gauge steel construction throughout makes these boxes tough enough to withstand years of rough use. Armor-Tuf™ coating assures long-lasting durability and good looks. Lockable push-button latch provides security for valuable tools, parts and accessories and easy "one-touch" opening. Complete step-by-step instructions make boxes easy to install.

ARMOR-TUF™
BONDED COATING

Cross Boxes with up to 18 cubic feet of storage

Twin doors allow easy access to stored equipment from either side of truck. Rigid, all-welded 16 gauge steel construction. Cross boxes suspended from side rails provide ample storage space inside for tools and plenty of room underneath for long materials that require full length of truck bed. A sliding steel tray with adjustable dividers is provided for organizing small parts and tools.

Portable tote tray is available as an option for all sizes.

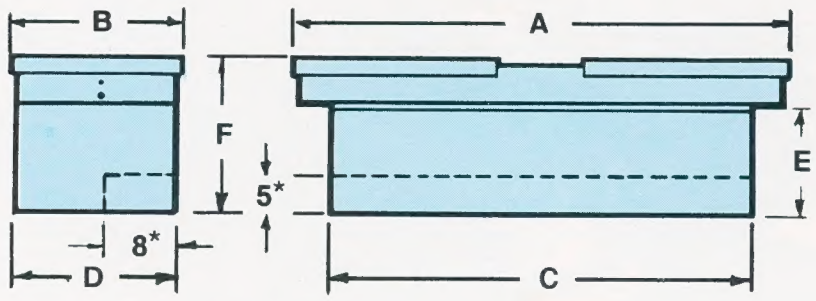

*MODEL 157 only

For Standard Full Size Pickup Trucks

Model	Cu. Ft.	Dimensions-Inches A	B	C	D	E	F	Ship Wt. Lbs.	Use With These Low-Side Box Models
115	18	72	28.5	63	27	11	17.50	185	175, 185
125	13.25	72	21.5	63	20	11	17.50	150	175, 185
For Flareside and Stepside Pickups									
135	11.25	62	21.25	53	20	11	17.50	135	185
145	10.25	57	21.25	48	20	11	17.50	127	185
For Short Bed Mini-Pickups (including S-10 and Ranger)									
155	8	60	21.25	51	20	6	12.50	122	185
157†	14	62	28.50	53	27	11	17.50	162	185

†For Chevrolet S-10, Ford Ranger only

For Long Bed Mini-Pickups (including S-10 and Ranger)									
135	11.25	62	21.25	53	20	11	17.50	135	175, 185
155	8	60	21.25	51	20	6	12.50	122	175, 185
157†	14	62	28.50	53	27	11	17.50	162	175, 185

NOTE: *Carefully measure inside width of truck bed to determine exact size and model number needed.*

Lo-Side Boxes with up to 6 cubic feet of storage

Expand your lockable storage space for long and odd-sized tools and equipment. Use singly, in pairs, or in combination with either the Cross Box or the Saddle Box for a space-efficient, good-looking storage system. Rigid, all welded 16 gauge steel construction. Gas springs open covers automatically and smoothly. Cover closes easily and securely to hold out dirt and moisture.

Bed-hugging design bolts securely to truck bed without restricting payload area. Portable, high-impact plastic tray is included.

Check out our new Super Lo-Side Boxes on page 7 for greater storage capacity.

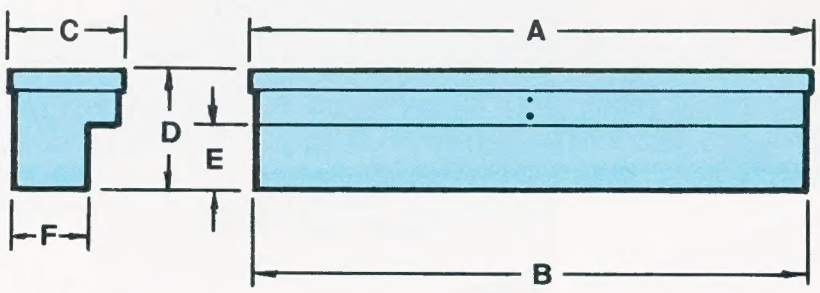

For use separately on Standard Full-Size Pickup Trucks

Model	Cu. Ft.	Dimensions-Inches A	B	C	D	E	F	Ship Wt. Lbs.	Use With These Cross Boxes	Use With These Saddle Boxes
165	6	87.75	86	11.75	12.50	6	8	115	None	None
For use either separately or in combination with Cross Boxes or Saddle Boxes on Pickup Truck beds 8′ long or longer										
175	3	61.75	60	11.75	12.50	6	8	85	115, 125 135, 145	116, 126
For Mini-Pickups (including S-10 and Ranger), **used either separately or in combination with Cross Boxes or Saddle Boxes**										
185	2.25	46.75	45	11.75	12.50	6	8	65	155, 157 135	156, 158

NOTE: *Carefully measure inside length of truck bed to determine exact size and model needed.*

Pack Rats organizes small, heavy parts

Carry heavy items at the lowest possible center of gravity. Fully adjustable bins organize small parts and tools for easy access without "digging." Low-profile Pack Rats provide concealed and secure storage for heavy items without significantly reducing truck bed cargo area. Reinforced 12 gauge steel diamond-plate top surface is strong enough to walk on and support stacked materials.

Lockable, full-length 16 gauge steel drawer is fully recessed and weatherstripped to protect contents from theft and weather. The all-welded drawer has full-length partitions and heavy duty roller-bearings to provide smooth, easy operation even when the drawer is fully loaded. "One-touch" push-button latch allows easy, one-hand operation. Drawer depth is 5". Distance between partitions is 9".

CAUTION: Since Pack Rat is designed for very heavy loading, it must be installed properly. All mounting holes must be used. Failure to mount unit correctly could cause damage or injury.

For Standard Size Pickup Trucks and Vans

Model	Dimensions-Inches Length	Width	Height	Ship Wt. Lbs.	Dividers Included
325	50.0	43.5	8.75	300	24
For Mini-Pickups (including S-10 and Ranger)					
320	50.0	33.75	8.75	250	18

Fits between the wheel wells on most Minis.

For Pickup or Van Applications that require less space than that provided by the Model 320 or 325. Ideal for stacking.

315	50.0	23.75	8.75	190	12

Extra Bin Dividers aluminized steel.
Shipped six per package.
Model 300 ... Wt. 6 lbs.

weather guard®

Full-length, reinforced covers provide easy access and storage for large, bulky items

Get extra storage capacity for larger items while maintaining maximum visibility out the back and sides. Sturdy 16 gauge steel construction. Fully arc-welded seams. Ribbed side construction, rolled-steel edges and rod-reinforced corners are combined for maximum strength and rigidity.

Fully weatherstripped to protect contents from dirt and weather. Durable Armor-Tuf™ Bonded Polyester Coating resists flaking and peeling.

"One-touch" push-button latches open covers automatically; lock securely.

ARMOR-TUF™
BONDED COATING

Saddle Boxes *with up to 18 cubic feet of storage*

Single-piece lid provides unrestricted access to contents. Rigid, all welded 16 gauge steel construction. Raised mounting allows long materials to slide in underneath for full use of truck bed. Dual push-button latches can be released from either side. Built-in cylinder lock resists pilferage; is accessible from driver's side only. Dual gas springs open cover smoothly and automatically; cover opening is adjustable.

Optional dividers and tote trays available.

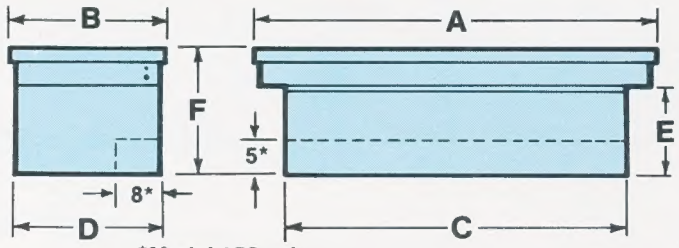

*Model 158 only

For Standard Full-Size Pickup Trucks

Model	Cu. Ft.	Dimensions-Inches A	B	C	D	E	F	Ship Wt. Lbs.	Use With These Side Boxes
116	18	72	28.50	63	27	11	17.50	185	175, 185
126	13.25	72	21.25	63	20	11	17.50	150	175, 185

For Short Bed Mini-Pickups (including S-10 and Ranger)

156	8	60	21.25	51	20	6	12.50	122	185
158†	14	62	28.50	53	27	11	17.50	162	185

†For Chevrolet S-10, Ford Ranger only

For Long Bed Mini-Pickups (including S-10 and Ranger)

156	8	60	21.25	51	20	6	12.50	122	175, 185
158	14	62	28.50	53	27	11	17.50	162	175, 185

***NOTE:** Carefully measure inside width of truck bed to determine exact size and model number needed.*

Super Lo-Side Boxes *with up to 9 cubic feet of storage* NEW!

All the same features of the Lo-Side Boxes but with greater depth for MORE storage capacity. Rigid, all welded 16 gauge steel construction. Full-length built-in tool compartment and sliding tray organizes small parts and tools. Mounting brackets gives rigid support without interfering with cargo area between wheel wells.

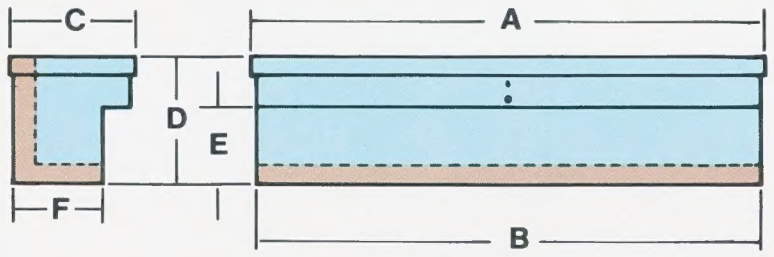

Gold indicates added storage capacity above standard Low-Side Box.

For use separately on Standard Full-Size Pickup Trucks

Model	Cu. Ft.	Dimensions-Inches A	B	C	D	E	F	Ship Wt. Lbs.	Use With These Cross Boxes	Use With These Saddle Boxes
166	9	87.75	86	16	13.50	7	11.50	155	None	None

For use either separately or in combination with Cross Boxes or Saddle Boxes on Pickup Truck beds 8′ long or longer

176	6	61.75	60	16	13.50	7	11.50	117	115, 125 135, 145	116, 126

For Mini-Pickups (including S-10 and Ranger), **used either separately or in combination with Cross Boxes or Saddle Boxes**

186	4	46.75	45	16	12.50	6	11.50	76	155, 157 135	156, 158

***NOTE:** Carefully measure inside length of truck bed to determine exact size and model number needed.*

All-Purpose Truck Chests *with up to 14 cubic feet of storage*

This box works as hard as you do. Rugged, 16 gauge steel construction with full-length, reinforced cover. Gas springs open cover automatically and hold it open; cover opening is adjustable.

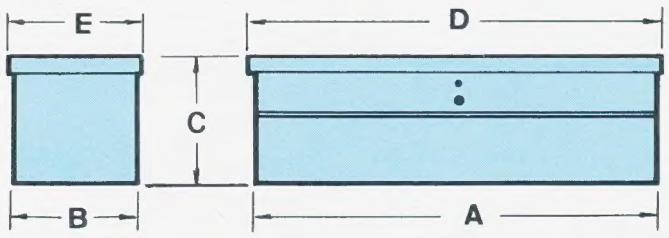

Super low-profile design makes these storage chests ideal for use in trucks with caps, El Camino/Ranchero style trucks or trucks with fifth-wheels that require full turning radius.

For Standard Full-Size Pickup Trucks

Model	Cu. Ft.	Dimensions-Inches A	B	C	D	E	Ship Wt. Lbs.
615	14	60	20	20	61.75	21	124
625	9.5	45	20	18	46.75	21	94

For El Camino and Ranchero Trucks

625	9.5	45	20	18	46.75	21	94

Accessories *for Cross Boxes, Lo-Side Boxes, Saddle Boxes and All-Purpose Truck Chests*

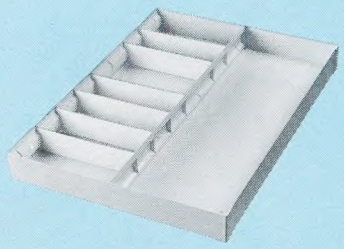

Steel Divider Tray has six dividers. Fits all Cross Boxes, Saddle Boxes and All-Purpose Chests.
Model 616 ... 26-3/4″ × 19-3/8″ × 2-3/4″ ... Wt. 14 lbs.

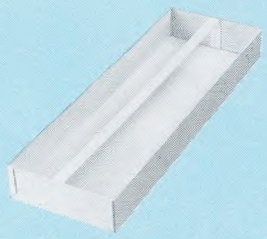

Steel Tote Trays for Cross Boxes and All–Purpose Chests. **Model 617** ... 20″ × 9″ × 3″ ... Wt. 8 lbs. Fits 20″ wide boxes.
Model 618 ... 26-3/4″ × 9″ × 3″ ... Wt. 11 lbs. Fits 27″ wide boxes only.

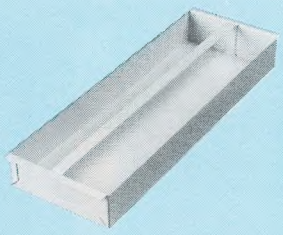

Steel Tote Trays for Saddle Boxes.
Model 619 ... 18-1/2″ × 9″ × 3″ ... Wt. 8 lbs. (For models 126, 156)
Model 620 ... 25-5/8″ × 9″ × 3″ ... Wt. 11 lbs. (For models 116, 158)

Removable Tray for Lo-Side and Super Lo-Side Boxes. High-impact plastic tray.
Model 911 ... 19″ × 11″ × 3-1/2″ ... Wt. 4 lbs.
Optional Steel Dividers for 911 Tray. Shipped 3 per package. **Model 913** ... Wt. 3 lbs.

Touch-Up Paint 13 oz. aerosol.
Model 909 ... Wt. 2 lbs.
Lubricating Compound 13 oz. aerosol.
Model 912 ... Wt. 2 lbs.

weather guard®

Hi-Side Boxes *with up to 11 cubic feet of storage*

Get all the lockable storage you need without interfering with truck bed cargo area.

These Hi-Side Boxes mount on top of the side rails to maintain maximum truck bed cargo area. Convenient drop-down doors give full view of contents and feature full-length piano hinges with stainless steel pins. Doors are suspended by cables secured to the inside of the box.

Storage cabinet is rigid 16 gauge steel; ends, center panel, and doors are precision formed from heavy 14 gauge steel to provide extra strength. Lockable push-button latches open easily and close securely. Doors can be set to lock automatically when slammed shut.

Boxes are fully arc-welded from the inside and ground smooth on the outside. Armor-Tuf™ Bonded Polyester Coating gives long-lasting, clean appearance.

Front panel design includes an integrally-formed rain deflector that adds strength to the box and helps keep rain away from the weatherstripped door. Special flanged door design channels water away from the door opening to keep contents dry.

Super-Side Boxes *with up to 14 cubic feet of storage*

The storage capacity champ of high-profile storage boxes.

Get all the same advantages of the Hi-Side Boxes but with a greater height and depth for a full **36% MORE** storage space. Super-Side Boxes are formed from sturdy 16 gauge steel with heavy 14 gauge steel end panels, doors, and center panel.

Positive-bolt, push-button latch features a "super-tuf" nylon push-button that is virtually indestructible. Cylinder locks are built-in and can be set to lock when the door is slammed shut.

These boxes are ideal for contractors who need to carry lots of tools and equipment but require full use of the truck bed.

Optional accessory trays are available to keep small parts and tools organized and readily available without "digging."

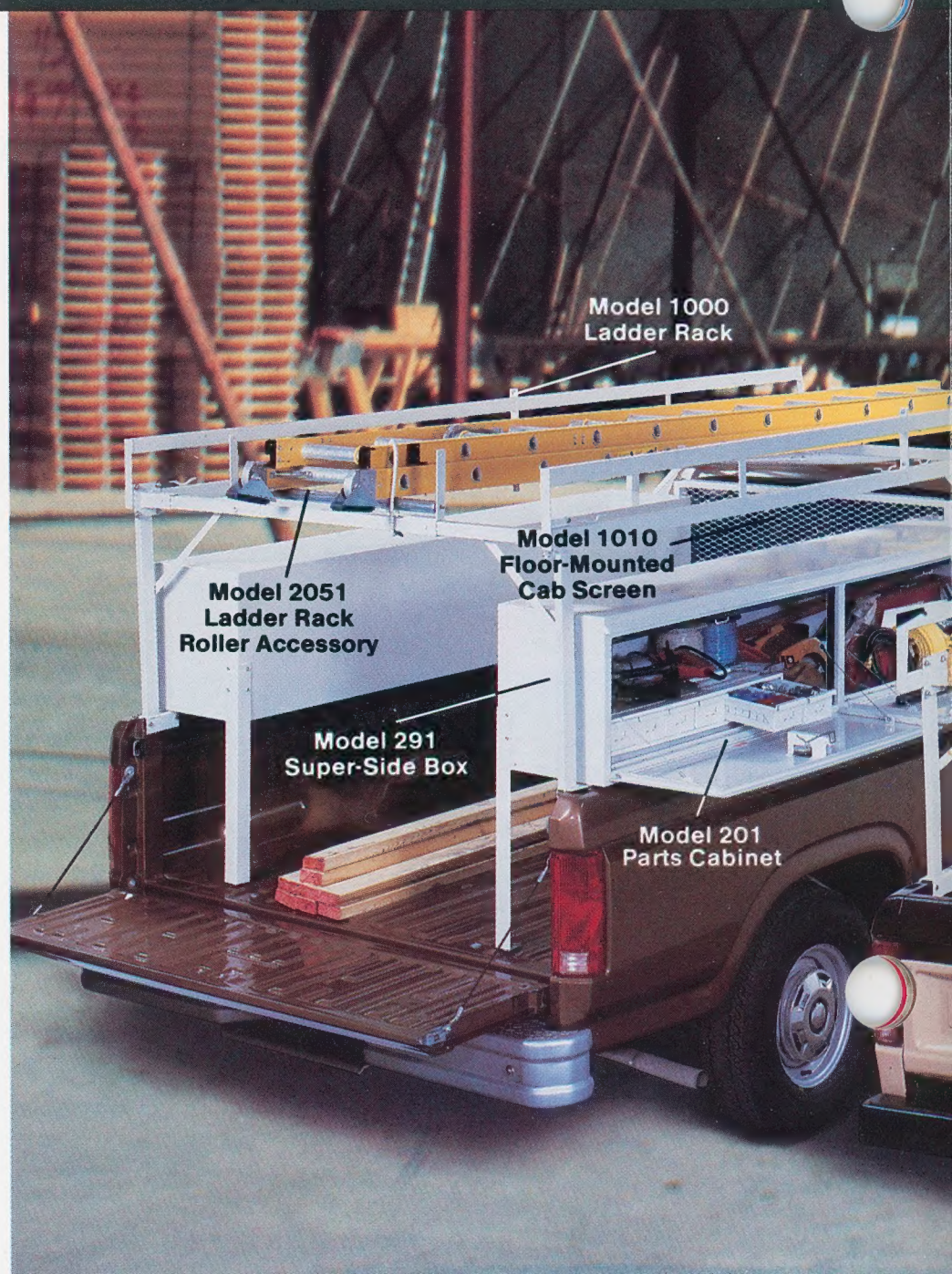

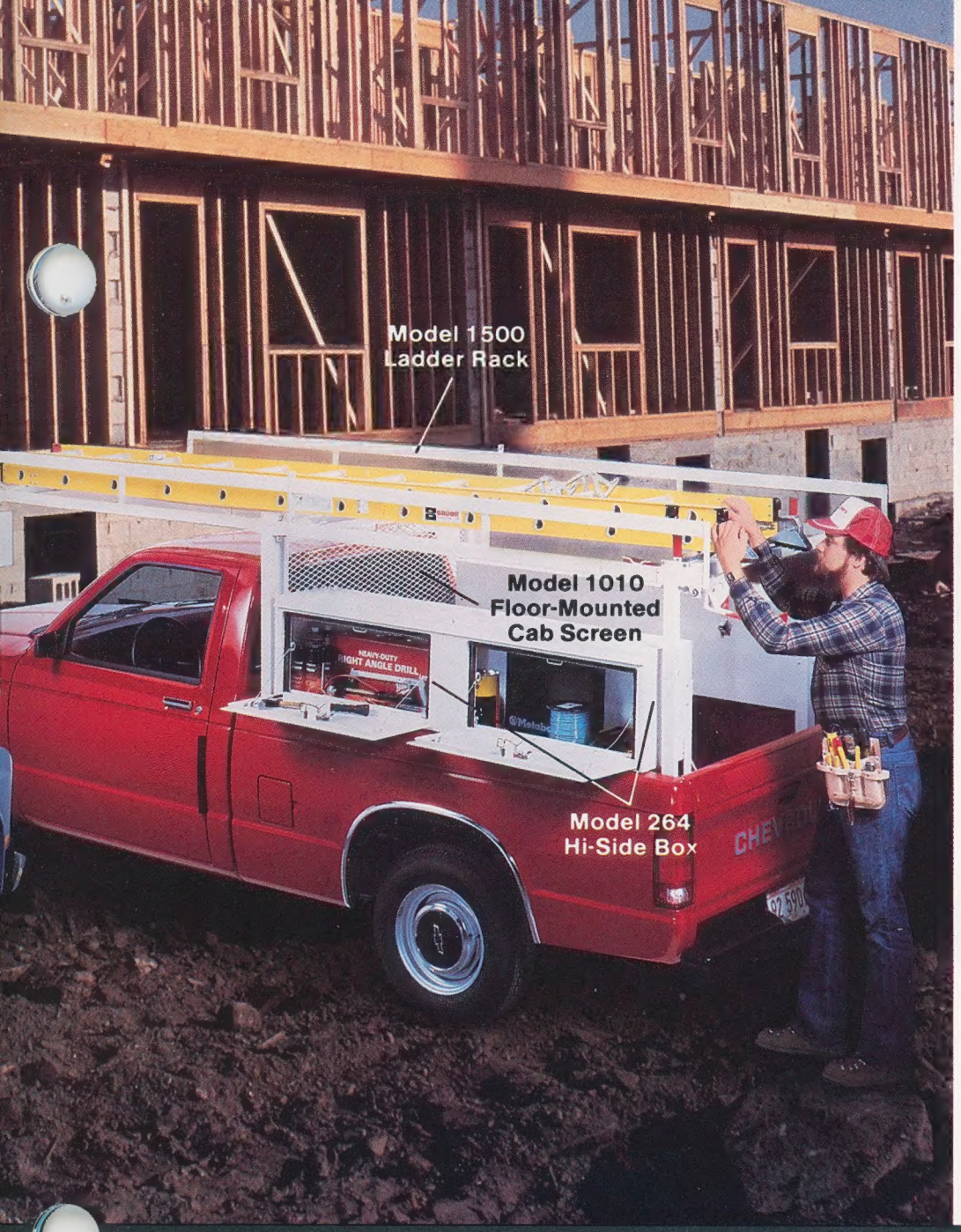

Hi-Side Boxes

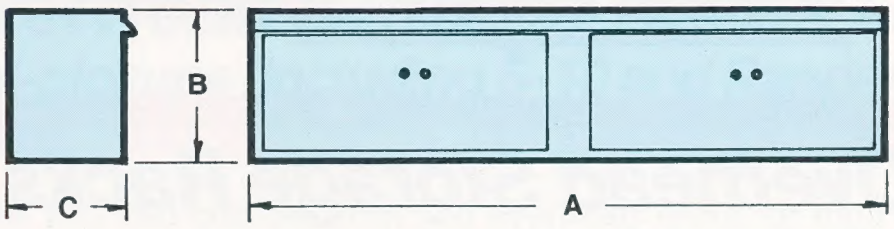

For Standard Full-Size Pickup Trucks

Model	Cu. Ft.	Dimensions-Inches A	B	C	Ship Wt. Lbs.
246	5.16	45.50	16	12.25	75
264	7.33	64.50	16	12.25	108
272	8.16	72.0	16	12.25	115
290	10.25	90.0	16	12.25	140
296	11.0	96.0	16	12.25	145

For Mini-Pickups (including S-10 and Ranger)

Model	Cu. Ft.	Dimensions-Inches A	B	C	Ship Wt. Lbs.
246	5.16	45.50	16	12.25	75
264	7.33	64.50	16	12.25	108
272	8.16	72.0	16	12.25	115

NOTE: *Carefully measure length of truck side rails to determine exact size and model number needed.*

Heavy angle-steel legs bolt securely to box and truck bed to support heavy loads.

Optional parts trays bolt inside box and organize small parts and tools.

Super-side boxes

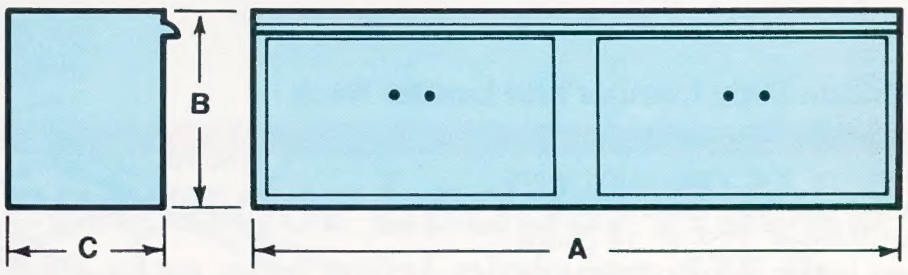

For Standard Full-Size Pickup Trucks

Model	Cu. Ft.	Dimensions-Inches A	B	C	Ship Wt. Lbs.
247	7	45.5	18	15	90
265	10	64.0	18	15	120
291	14	90.0	18	15	155

For Mini-Pickup Trucks (including S-10 and Ranger)

247	7	45.5	18	15	90
265	10	64.0	18	15	120

Accessories *for Hi-Side and Super-Side Boxes*

Accessory Trays are rugged 16 gauge steel with adjustable dividers. Trays bolt through back wall of front-opening Weather Guard® boxes.
Model 200 ... 41-1/2"L × 9-1/2"W ... Wt. 17 lbs.
Model 202 ... 24"L × 9-1/2"W ... Wt. 12 lbs.

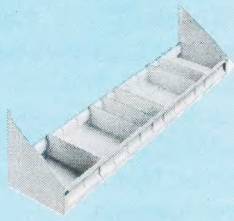

Parts Cabinet features drawers with movable partitions and heavy steel top. Bolts through the bottom of box. Keeps small parts organized and readily available.
Model 201 ... 34"L × 6-1/2"H ... Wt. 28 lbs.

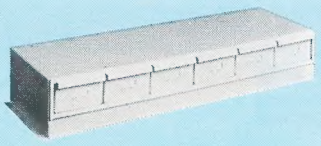

weather guard®

Overhead Storage Racks *for full-size pickup trucks*

Weather Guard® overhead storage racks are now available in three different models: heavy, medium and light duty. Now you can choose a rack with just the load rating you need. These racks are fully adjustable to fit full-sized pickup trucks with long or short wheel bases.

Weather Guard® overhead storage racks are Armor-Tuf™ coated to resist abrasion and give long-lasting good looks.

Complete step-by-step instructions are included to make installation quick and easy.

NEW! **Heavy Duty Pipe and Ladder Rack 1,500-lb. Capacity.**

This rack was specially designed for very heavy loading. Sturdy 2″ × 2″ 14 gauge steel tubing legs bolt securely to truck bed and side rails for extra strength. Front cross member can be extended to allow for longer loads. Perfect for protecting roof surfaces of crew-cab trucks. Rack comes complete with extra cross member to support flexible or short materials.

Model 1200 ... Wt. 200 lbs.

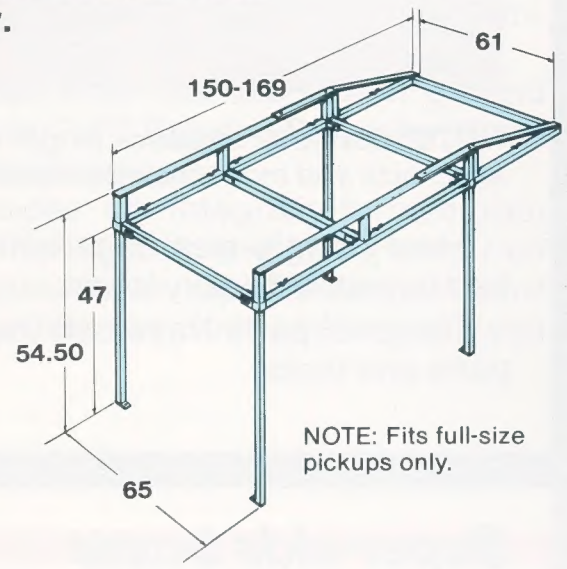

NOTE: Fits full-size pickups only.

ARMOR-TUF™ BONDED COATING

Medium Duty Lumber and Ladder Rack 1,000-lb. Capacity.

Ideal for the contractor who carries moderate loads of lumber and ladders. 1″ × 2″ 14 gauge steel tubing legs bolt securely to bed of truck and side rails. Cross members are 1-1/2″ × 1-1/2″ steel tubing for extra rigidity.

Model 1100 ... Wt. 155 lbs.

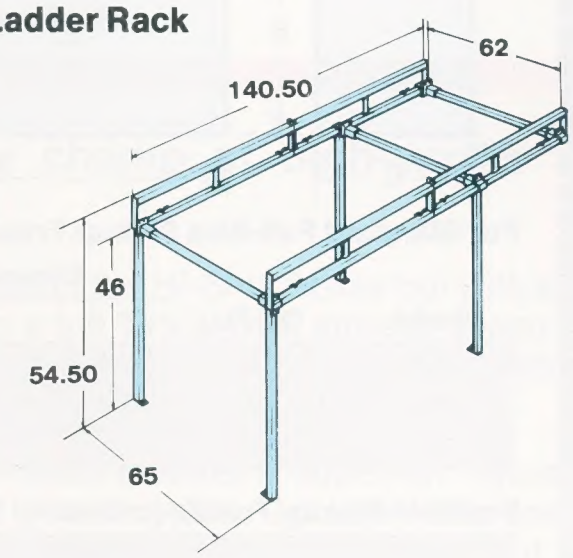

ARMOR-TUF™ BONDED COATING

NEW! **Light Duty Ladder Rack 500-lb. Capacity.**

Great for hauling ladders and light building materials to job-site. Reinforced 1″ × 2″ top rail is supported by 1″ × 2″ 14 gauge steel tubing legs that bolt to the top of truck side rail using special bracket. Perfect for the do-it-yourselfer. Not recommended for heavy loading.

Model 1000 ... Wt. 140 lbs.

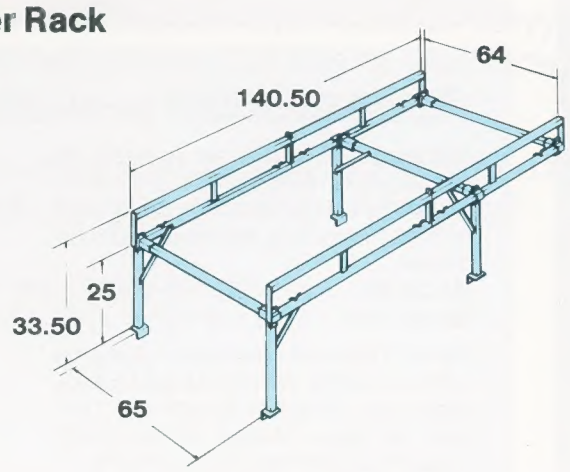

ARMOR-TUF™ BONDED COATING

Cap Rack *for Full Size Pickups. 500-lb. Capacity*

Specially designed Cap Rack makes use of otherwise wasted space. Weather Guard® Cap Rack eliminates the need to drill holes into truck caps to support ladder rack brackets.

NEW!

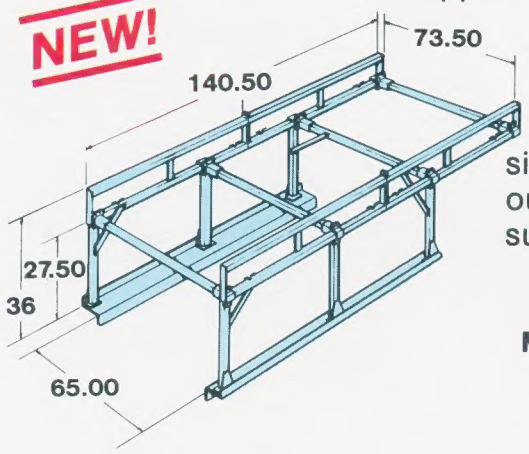

Full-length 7 gauge steel base plate mounts directly to the top of the truck side rails and extends out 6-1/4″ to give rigid support to 1″ × 2″ legs. Not recommended for heavy loads.

Model 1300 ... Wt. 280 lbs.

ARMOR-TUF™ BONDED COATING

Overhead Storage Racks *for mini-pickups (including S-10 and Ranger)*

Now you can choose from two overhead racks for mini's: medium and light duty. These racks are specially designed to fit in mini-pickups. Fully-adjustable legs adapt to fit both short or long beds. Armor-Tuf™ coated for long-lasting durability and good looks.

Medium Duty Lumber and Ladder Racks for Mini-Pickups 1,000-lb. Capacity

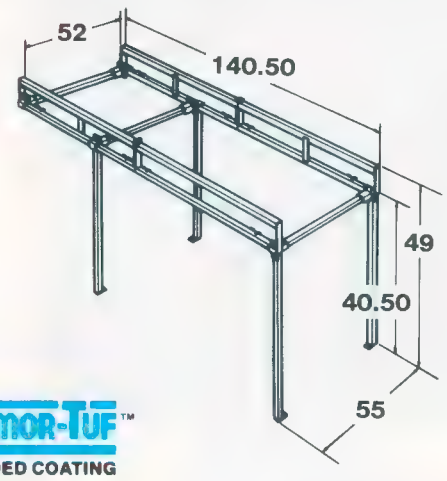

Carry moderate loads of building materials and ladders on this sturdy, floor-mounted rack. Complete step-by-step instructions make installation easy and fast. All assembly hardware is included.

NOTE: Mounting this rack in Ford Ranger requires two (2) Model 1050 Ranger mounting pockets.

Model 1500 ... Wt. 150 lbs.

ARMOR-TUF™ BONDED COATING

Light Duty Ladder Rack for Mini-Pickups 500-lb. Capacity

NEW!

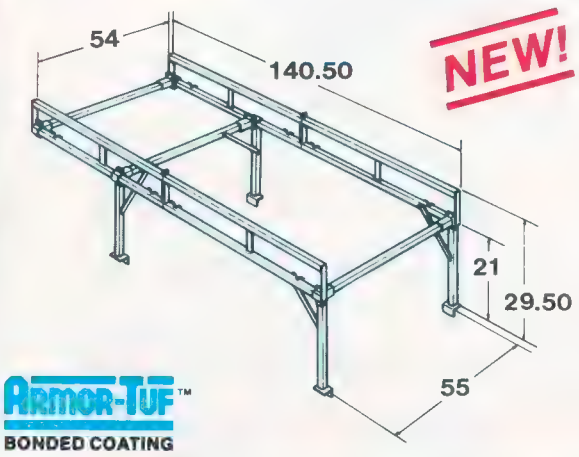

This rugged ladder rack mounts to the top of the side rails of your truck using special brackets for added rigidity. Great for moving ladders and light building materials to and from jobsites. Not recommended for heavy loading.

Model 1700 ... Wt. 140 lbs.

ARMOR-TUF™ BONDED COATING

Weekender Ladder Racks *for full-size and mini-pickups. 175-lb. Capacity*

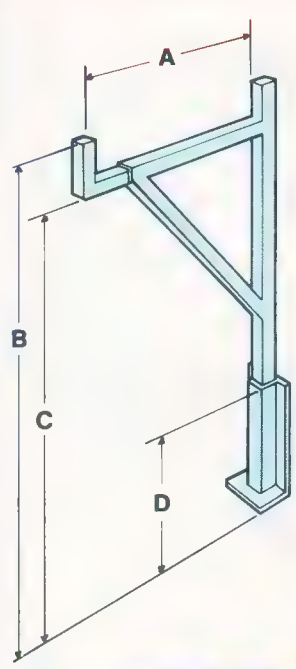

Convenient, lift-out design lets you remove the WEEKENDER Rack easily. Perfect for the do-it-yourselfer who doesn't want or need a permanent ladder rack. 1-3/4" square 14 gauge steel tubing "pockets" fit neatly out of the way in the front and rear corners of the truck bed without restricting rear loading. Telescoping top rails lock securely and extend from 19" to 36" to allow for wider loads.

For Full-Size Pickups

Model	Dimensions-Inches A	B	C	D	Ship Wt. Lbs.
1400	19.0-36.0	52.25	45.0	19.25	50

For Mini-Pickups

1600	19.0-36.0	49.0	41.75	16.0	45

ARMOR-TUF™ BONDED COATING

weather guard®

...“The Professionals’ Choice”

Ladder Rack Accessories
for full-size and mini-pickups

Ladder Rack Extension

Increase your overhead loading capability for extra-long items by adding the ladder rack extension to your Weather Guard® ladder rack. Extension rack bolts securely to ladder rack and front bumper of the truck. 16 gauge steel double-wall end cap prevents forward movement of materials during quick stops. Fits Models 1000, 1100, 1300, 1500, 1700.
Model 1110 ... Wt. 110 lbs.

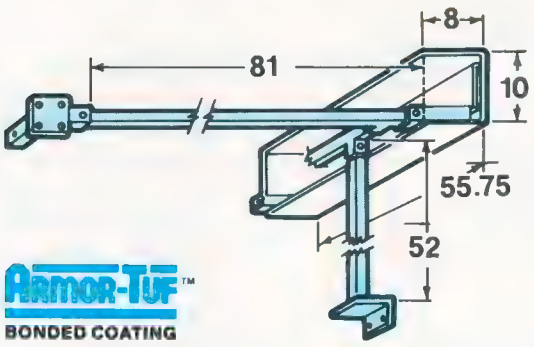

ARMOR-TUF™
BONDED COATING

Ladder Rack Mounting Pockets

For use on Ford Ranger mini-pickups. Required for mounting front legs of Model 1500. Shipped in pairs.
Model 1050 ... Wt. 16 lbs.

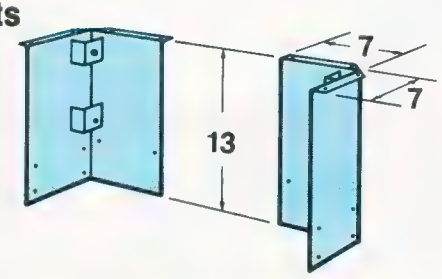

Extra Cross Members

Provide extra support for items that are flexible or too short for standard cross bar spacing. For Models 1000, 1100, 1500, 1700, 1800. Cut to fit.
Model 1040 ... Wt. 15 lbs.

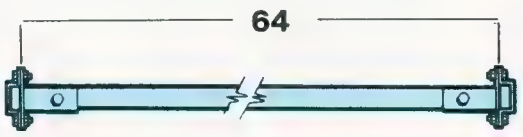

Accessory Roller

Facilitates easy loading and unloading of ladders and other materials from overhead ladder racks. Fits Models 1000, 1100, 1300, 1500, 1700, 1800.
Model 2051 ... Wt. 8 lbs.

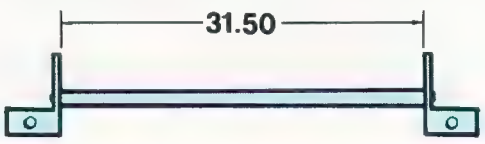

Protecta Rail Cab Protectors

Protect yourself and truck cab from shifting cargo during sudden stops. No assembly required. Complete step-by-step mounting instructions included.
NOTE: Cannot be used in combination with ladder racks.
Model 1900 ... Wt. 40 lbs.

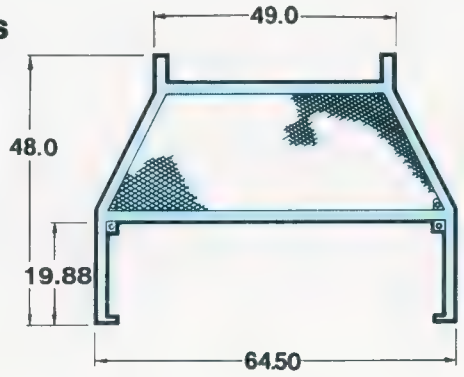

Floor-Mounted Cab Screen for full-size and mini-pickups

This protective screen may be used in combination with Weather Guard® overhead racks. Fits snugly into front of truck bed.
Model 1010 ... Wt. 35 lbs.

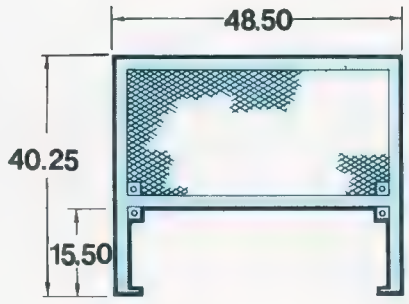

NEW!

Rack-Mounted Cab Screens for full-size and mini-pickups

Protective screens bolt directly to the front legs of Weather Guard® overhead racks; keep area in front of truck bed clear. Diamond-punched 16 gauge steel welded to 1″ × 1″ steel tubing.

For Full-Size Pickup Trucks

Fits rack models 1000, 1100, 1200.
Model 1020 ... Wt. 37 lbs.

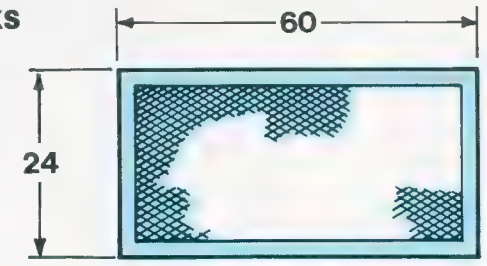

For Mini-Pickups

Fits Models 1500, 1700.
Model 1510 ... Wt. 33 lbs.

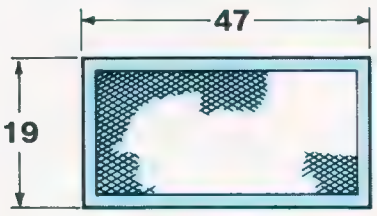

NEW!

Heavy Duty Lock and Chain

Protect your ladders and other materials with this heavy duty lock and chain. 3-foot long, 3/8″ Dia. plastic covered chain. Brass lock with key.
Model 1540 ... Wt. 5 lbs.

Quick Clamp for Full-Size and Mini-Pickup Overhead Racks

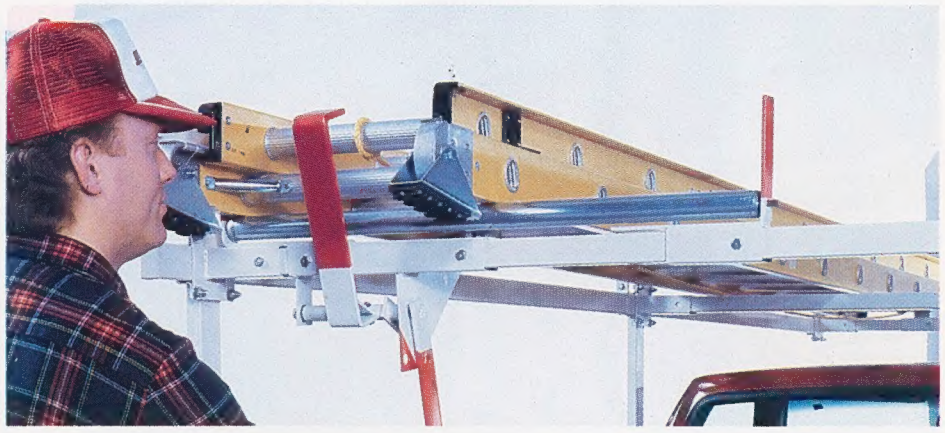

Provides a quick and easy way to secure ladders to ladder racks. Built-in roller makes one-man loading and unloading of ladders easy. Unit can be locked in closed position to protect against pilferage. For use on driver's side only. (Padlock not included.) Fits Models 1000, 1100, 1500, 1700, 1800.
Model 1070 ... Wt. 17 lbs.

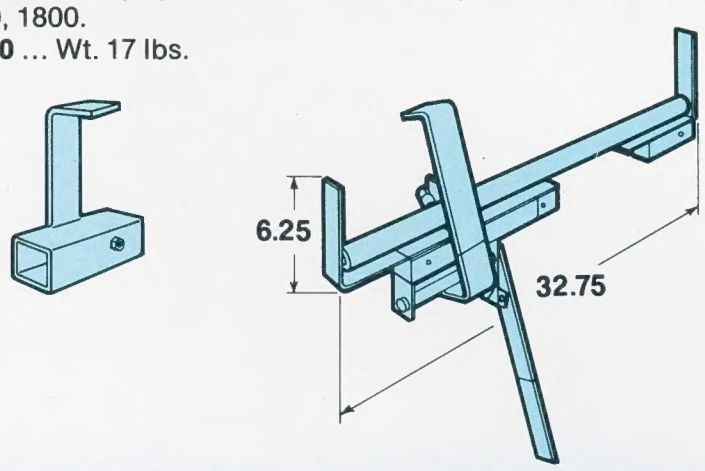

Conduit Carrier

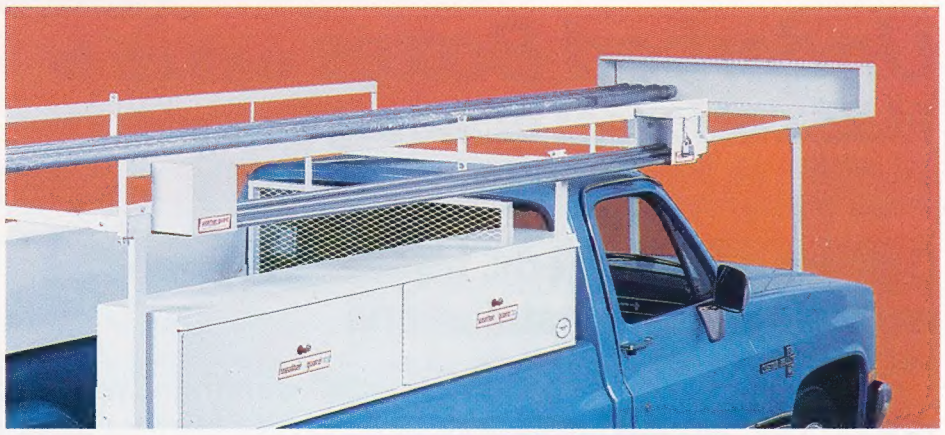

Safely transport thin-wall conduit in this double-ended, adjustable-length conduit carrier. Lockable cover on one unit secures contents from pilferage. (Padlock not included.) Fits Models 1000, 1100, 1300, 1500, 1700, 1800.
Model 1030 ... Wt. 20 lbs.

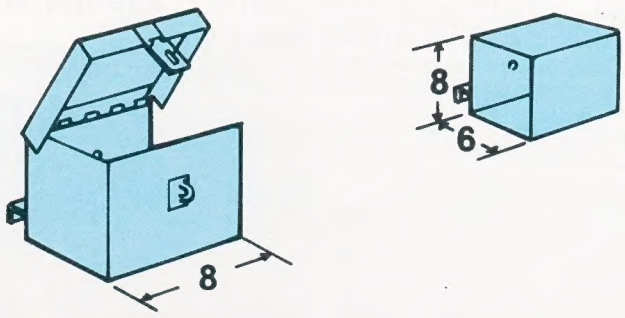

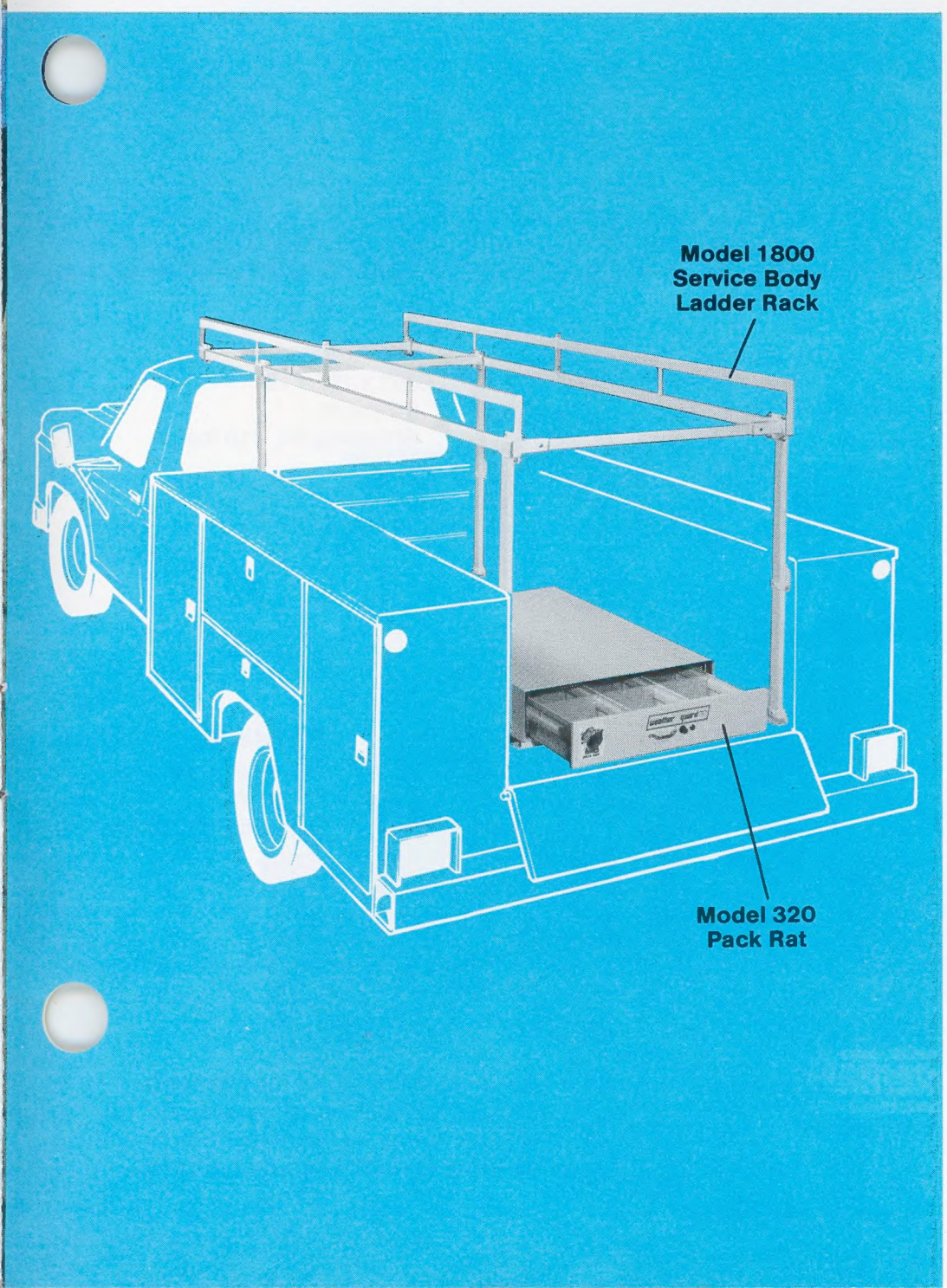

Ladder Rack and Accessories for Service Bodies

NEW!

Equip your service body truck with quality Weather Guard® ladder racks and accessories.

Ladder Rack for Service Body Trucks ... 1,000-lb. Capacity
Carry heavy loads of pipe, ladders and other building materials overhead with this heavy duty rack. Sturdy 1" × 2" legs bolt securely to truck bed and sides to provide extra rigid support.
Model 1800 ... Wt. 160 lbs.

For added lockable storage space, use the Weather Guard® Pack Rat, Model 320.

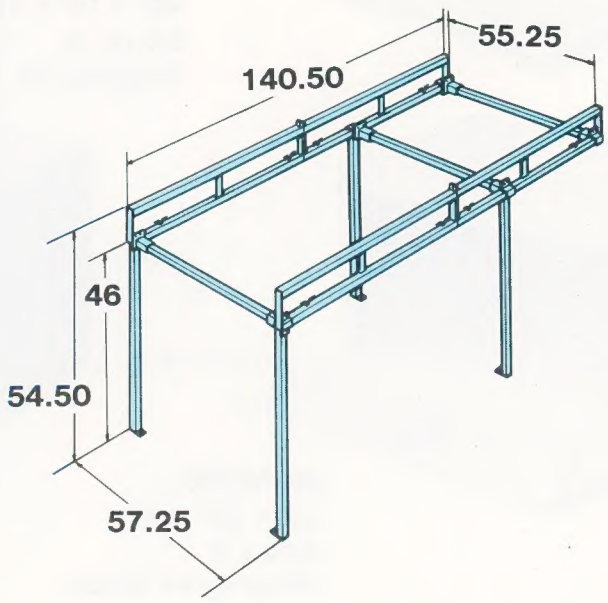

weather guard®

Underbed Boxes with up to 11.25 cubic feet of storage

Designed for flatbeds, trailers, stake bodies, and dump body installations.

These super-tough 12 gauge steel cabinets, with their Armor-Tuf™ Bonded Polyester Coating are perfect to store and protect chains, flares, jacks and valuable tools against road grime and weather.

All seams are 100% arc-welded to withstand hard use. Sturdy, tamper-proof latch protects against theft.

Front panel has a special lip that deflects water away from the door opening. Edges of the 14 gauge steel door are specially formed to seal tightly against the rubber weatherstripping and channel away water.

ARMOR-TUF™
BONDED COATING

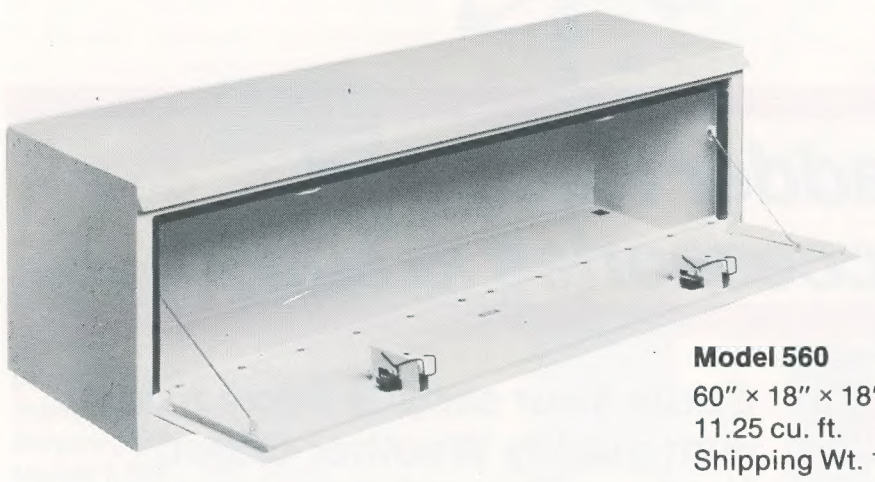

Model 560
60″ × 18″ × 18″
11.25 cu. ft.
Shipping Wt. 175 lbs.

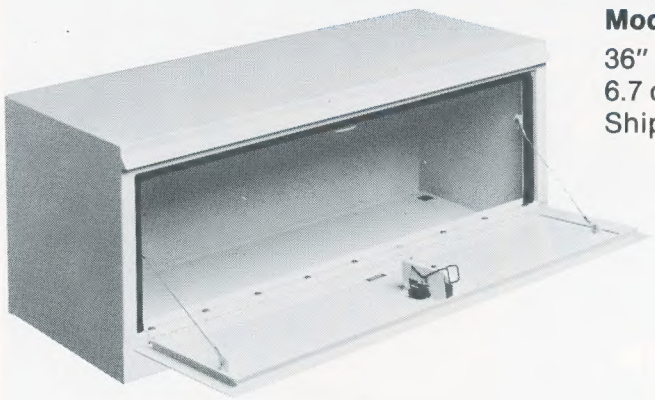

Model 536
36″ × 18″ × 18″
6.7 cu. ft.
Shipping Wt. 110 lbs.

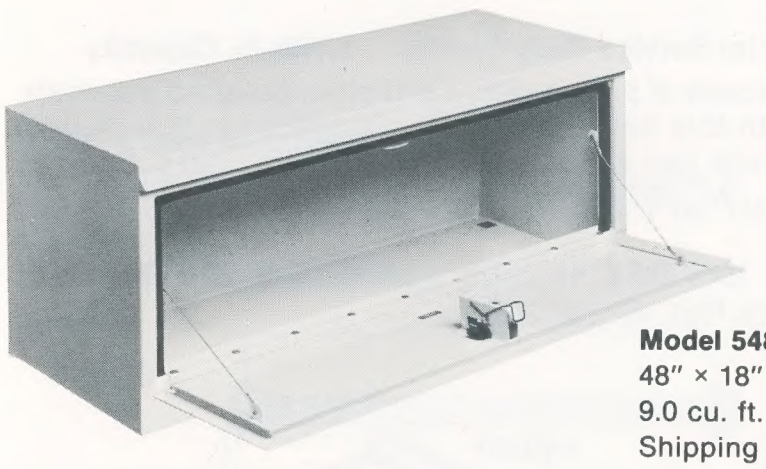

Model 548
48″ × 18″ × 18″
9.0 cu. ft.
Shipping Wt. 135 lbs.

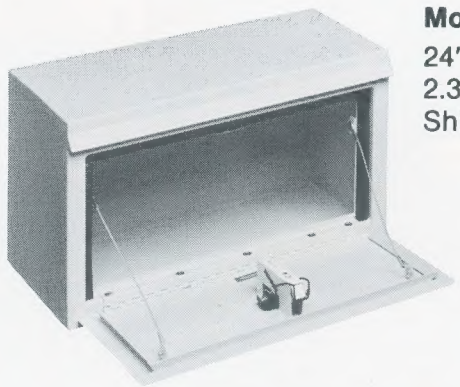

Model 525
24″ × 12″ × 14″
2.3 cu. ft.
Shipping Wt. 40 lbs.

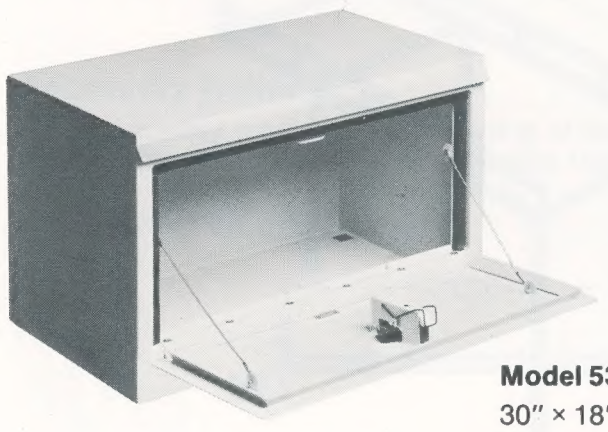

Model 530
30″ × 18″ × 18″
5.6 cu. ft.
Shipping Wt. 95 lbs.

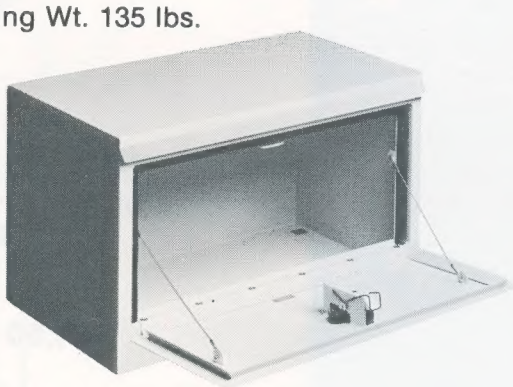

Model 524
24″ × 18″ × 18″
4.5 cu. ft.
Shipping Wt. 82 lbs.

UNDERBED BOX for mini flatbeds
16 gauge welded steel cabinet. All other features identical to other Weather Guard® Underbed Boxes.

Strong Boxes for trucks with caps. Up to 8.8 cubic feet of storage capacity

Add maximum security inside your truck cap for small, valuable cargo such as electronic test gear or cable TV equipment. All-welded 16 gauge steel construction combined with the Watchman II double lock system, special 1/4" thick security shield all around the lid of the box and a 1/4" thick plate steel reinforcing in the cover gives an extra measure of protection against theft. (Padlocks not included.)

Designed for interior use only. Must be welded or bolted to the truck bed.

ARMOR-TUF™
BONDED COATING

WATCHMAN® II
LOCK SYSTEM

Model 9042
42" × 19" × 19"
8.8 cu. ft.
Shipping Wt. 113 lbs.

Model 9032
32" × 19" × 14"
4.9 cu. ft.
Shipping Wt. 85 lbs.

KNAACK®

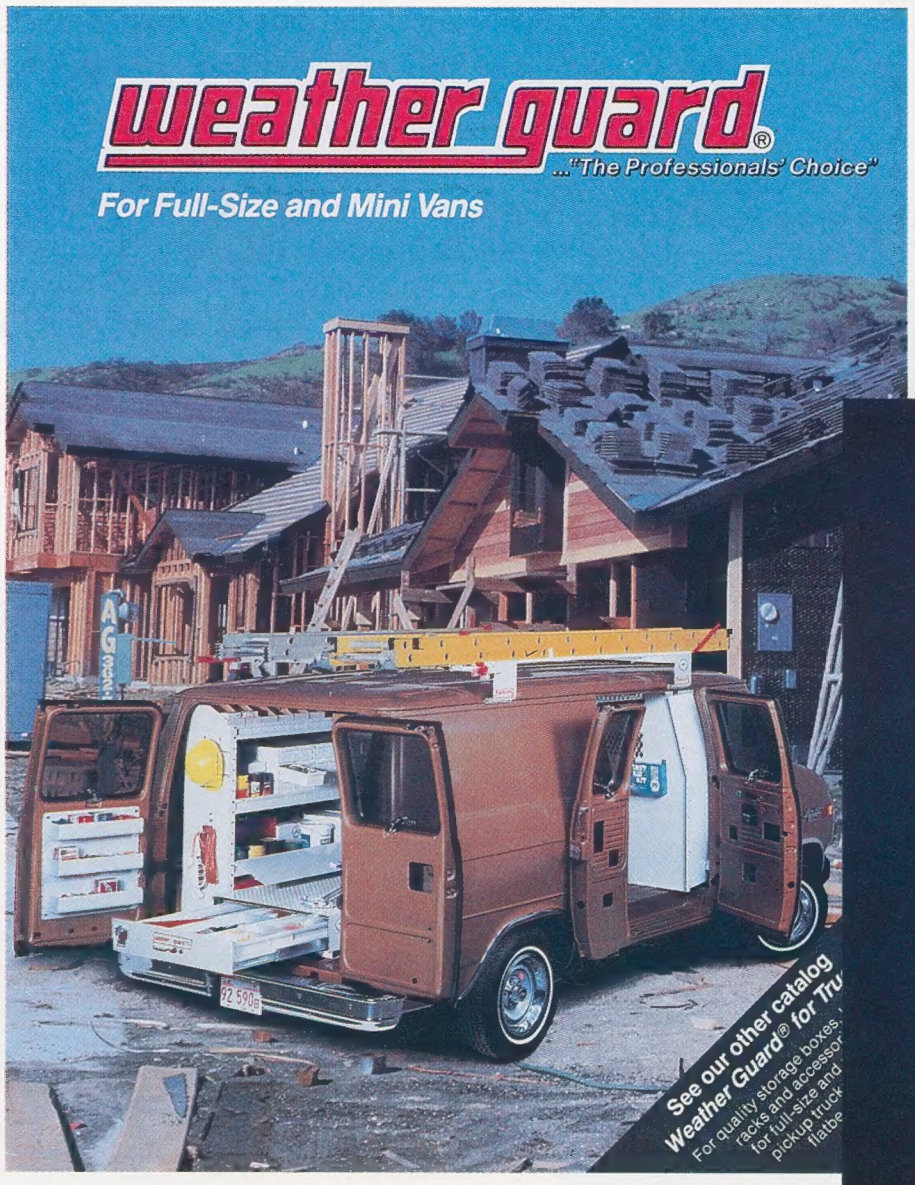

Now Weather Guard® offers a complete line of storage systems and accessories for vans. Call or write for our NEW full-color catalog.

Knaack — the largest selection of chests, cabinets and work benches for jobsite convenience and security. Write or call for our full-color catalog.

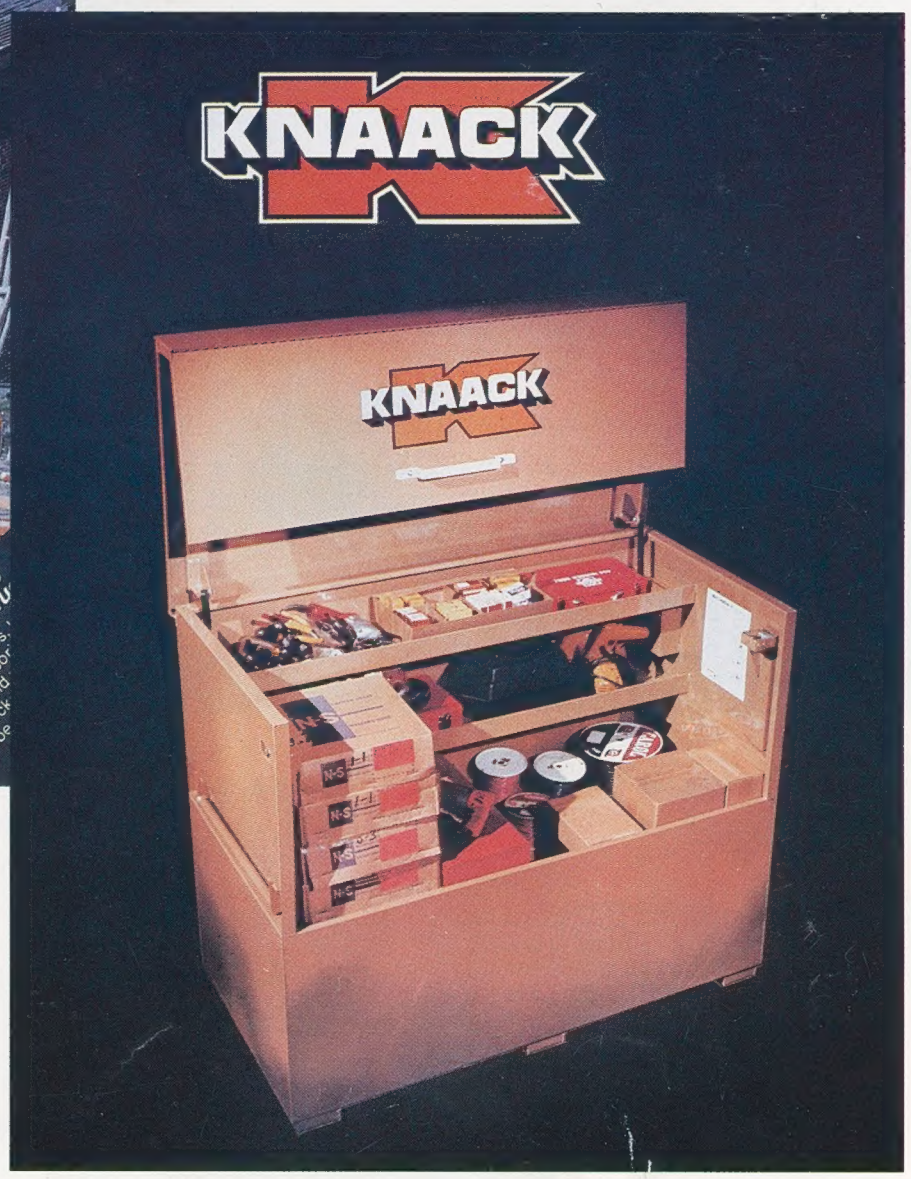

Your Knaack and Weather Guard® Distributor:

For the name of the Knaack and Weather Guard® dealer nearest you, **CALL TOLL-FREE 1-800-435-6100.** (In Illinois call 815-459-6020.)

ANOTHER QUALITY PRODUCT by KNAACK MFG. CO. CRYSTAL LAKE, IL 60014 815/459-6020

The sign of Knaack Quality

LACEY TRUCK EQUIPMENT, INC.
50 MYSTIC AVENUE
P. O. BOX 87
MEDFORD, MASS. 02155
(617) 396-2880

All designs subject to change without notice.

KNAACK MFG. CO. • 420 E. Terra Cotta Avenue • Crystal Lake, Illinois 60014 • Phone: 815/459-6020

Form No. WTC286IP

© KNAACK MFG. CO. 1986 Printed in U.S.A.